English

LEYON-Safe-E

Door safety sensor

Instruction manual

Carlo Gavazzi Industri, Over Hadstenvej 40, 8370 Hadsten, Denmark

Table of Contents

1. Introduction . . . 4
1.1. Description . . . 4
1.2. Use of the product . . . 4
1.3. Safeguarding level . . . 4
1.4. Installation information . . . 4
1.5. Laser safety . . . 5
1.6. Other documents . . . 5
1.7. No data storage or facial recognition . . . 5
1.8. Firmware updates . . . 5
1.9. Acronyms . . . 5

2. Product . . . 6
2.1. Main features . . . 6
2.2. Safeguarding level E . . . 6
2.3. UL 325 . . . 6
2.4. Identification number . . . 7
2.5. Operation . . . 7
2.5.1 Outputs . . . 7
2.5.1.1. Connection to a door controller . . . 7
2.5.2 Inputs . . . 8
2.5.2.1. Test input, safety function verification . . . 8
2.5.2.1.1. Test input and Eco function . . . 8
2.5.2.2. Teach input . . . 8
2.6. DIP switches and their function . . . 9
2.6.1. Function of DIP-switches . . . 9
2.6.1.1. Cross talk and channels . . . 9
2.6.1.2. Output inverter via DIP-switch . . . 10
2.6.1.3. Disable and enable Wi-Fi via DIP-switch . . . 10
2.7. Factory reset . . . 10

3. User interface/LEDs . . . 11
3.1. LED indications during run conditions . . . 11
3.2. LED indications during teach . . . 12

4. Commissioning . . . 13
4.1 Physical installation . . . 13
4.2. Connecting the sensor . . . 14
4.3. Auto-Teach . . . 14

5. Web app . . . 15
5.1. Access to Web app with QR codes . . . 15
5.2. Web app menu . . . 15
5.2.1. Set-up mode toggle . . . 15
5.3. Diagnostics . . . 16
5.3.1 Sensor data . . . 16
5.3.2. Sensor status . . . 16
5.3.3. Internal temperature . . . 16
5.3.4. Event log . . . 16
5.4. Detection . . . 17
5.4.1. Safety zone . . . 17
5.4.1.1. Manual set-up of the safety zone . . . 18
5.4.1.2. Auto-Teach safety zone via Web app . . . 19
5.4.2. Manually define installation angles . . . 20

5.5. Parameters. . . . 21
5.5.1. General setup . . . 21
5.5.1.1. LED function . . . 21
5.5.1.2. Channel select . . . 21
5.5.1.3. Floor offset . . . 22
5.5.1.4. Parameter control . . . 22
5.5.1.5. Environment filter . . . 22
5.5.2. Output setup: . . . 22
5.5.2.1. Output functions . . . 22
5.5.2.1.1 Safety function . . . 22
5.5.2.1.2. Warning output. . . . 23
5.5.2.1.3. Error output . . . 23
5.5.2.2. ON delay . . . 23
5.5.2.3. OFF delay . . . 24
5.5.2.4. Output inverter . . . 24
5.6. Settings . . . 25
5.6.1. Access to the 'Settings' . . . 25
5.6.2. Settings . . . 25
5.6.2.1. Sensor name and location . . . 25
5.6.2.2 Web app language . . . 25
5.6.2.3. Units . . . 25
5.6.2.4. Eco function . . . 25
5.6.2.5. Upload firmware . . . 26
5.6.2.6. Upload and download settings . . . 26
5.6.2.7. Reset to factory. . . . 26

6. Trouble shooting . . . 27
6.1. Sensor LEDs do not light up. . . . 27
Resolution suggestions: . . . 27
6.2. Door does not stop and re-open when it should . . . 27
Resolution suggestions: . . . 27
6.3. Door stops and re-opens despite empty safety zone . . . 27
Resolution suggestions. . . . 27
6.4. Sensor test signal does not work . . . 28
Resolution suggestions. . . . 28
6.5. Sensor Wi-Fi not found. . . . 28
Resolution suggestions. . . . 28
6.6. Auto-Teach unsuccessful. . . . 28
Resolution suggestions . . . 28
6.7. Sensor gets confused by nearby sensor. . . . 28
Resolution suggestion1 - using the Web app . . . 28
Resolution suggestion 2 - using DIP switches . . . 28

7. Wiring diagram . . . 29

8. Dimensions in mm (inches) . . . 30

9. Installation Hints . . . 31

10. Other documents. . . . 32

1. Introduction

EN

This document is the original instruction manual for Carlo Gavazzi LEYON-Safe-E sensor. It describes how to install, setup and use the product for its intended purposes.

1.1. Description

Carlo Gavazzi LEYON-Safe-E sensors are devices designed and manufactured in accordance with IEC international standards, relevant EU directives, and UL and US requirements.

All rights to this document are reserved by Carlo Gavazzi Industri, copies may be made for internal use only. The manual is valid for the LEYON-Safe-E sensor until new documentation is published.

Please do not hesitate to make any suggestions for improving this document.

1.2. Use of the product

The LEYON-Safe-E sensor is a primary safety device designed for use with fast-moving, automatic doors in industrial environments. Installed together with a door controller, it forms part of a safety system that monitors the safety zone in front of the door. The sensor detects the presence of people, vehicles and other objects within its detection area and helps prevent injury or damage caused by a closing door. The maximum door size is 5 m x 2.5 m or 4 m x 4 m (197 x 98 in or 157 x 157 in) depending on the installation configuration.

The installer of the door system is responsible for the safety compliance of the installation according to national and international regulations and standards. This includes risk assessment and sensor installation.

The manufacturer cannot be held responsible for incorrect use, incorrect installation, inappropriate adjustment, unauthorized modification, inadequate maintenance, or operation of the sensor outside its specified application and performance limits.

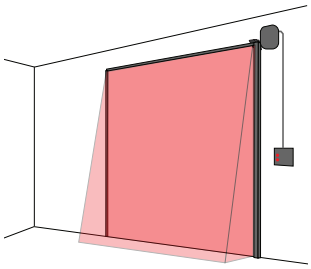

1.3. Safeguarding level

This sensor has safeguarding level E according to EN 12453, and can be used to prevent industrial doors from causing injury to people. It must be used in conjunction with a door controller, that handles the opening and closing of the door.

1.4. Installation information

Installation and set up must be carried out by trained technical personnel with basic electrical installation knowledge and according to relevant door standards. The installer is responsible for correct installation according to local safety regulations and must ensure that a defective sensor will not result in any hazard to people or equipment. If the sensor is defective, it must be replaced and secured against unauthorised use. Dispose of discarded sensor as electronic waste.

The sensor can handle flying snow, driving rain as well as fog, but runnels of water or clogging snow on the sensor front will significantly lower the signal quality. Equally, the sensor may overheat if placed in direct sunlight in warm climates. To avoid these situtations, install a cover to protect the sensor.

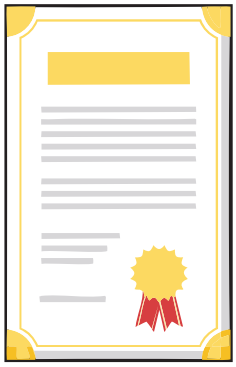

1.5. Laser safety

The laser is a class 1 infrared laser according to IEC 60825-1:2014 as well as EN 60825-1:2014 + EN 60825-1/A11:2021, that is safe for the eyes as long as the front glass is undamaged. If the front glass is damaged, disconnect sensor immediately.

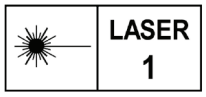

Caution: The use of controls, adjustments, or performance of procedures other than those specified herein may result in hazardous radiation exposure.

1.6. Other documents

Please find the datasheet, quick start guide and technical drawings at http://gavazziautomation.com

1.7. No data storage or facial recognition

The purpose of this declaration is to serve as information, that the LEYON-Safe-E sensor does not use facial recognition in any way, shape or form.

We hereby declare that the LEYON-Safe-E Sensor is designed without any facial recognition algorithms or systems. No images where any individual person is identifiable will be stored on the device or on any server.

When the sensor is active, the point-to-point Wi-Fi is disabled. The sensor can only connect to one mobile device at a time. While the device is connected to the sensor, it has no access to the internet. The LEYON-Safe-E sensor sends no data to external storage.

The only way to move data out of the sensor is by manual export of sensor settings to a mobile device via the built-in Wi-Fi. This export does not contain any imaging, only settings.

1.8. Firmware updates

Carlo Gavazzi Industri does not push firmware upgrades to any sensor sold or in use. Firmware updates are a manual process that must be handled by qualified personnel.

1.9. Acronyms

EMR	Electromechanical relay
IEC	International Electrotechnical Commission
N.C.	Normally Closed contact
N.O.	Normally Open contact
PLC	Programmable Logic Controller
SPDT	Single pole double throw
SSR	Solid state relay

2. Product

2.1. Main features

The Carlo Gavazzi LEYON-Safe-E door safety sensors are available in a robust, weather safe aluminum housing.

They are certified for Safeguarding level E, and feature an intelligent auto-Teach function as well as a Web app for special functions.

The sensor has 8 light sources (Class 1 lasers) and 1 camera, giving the sensor a 90° field of view.

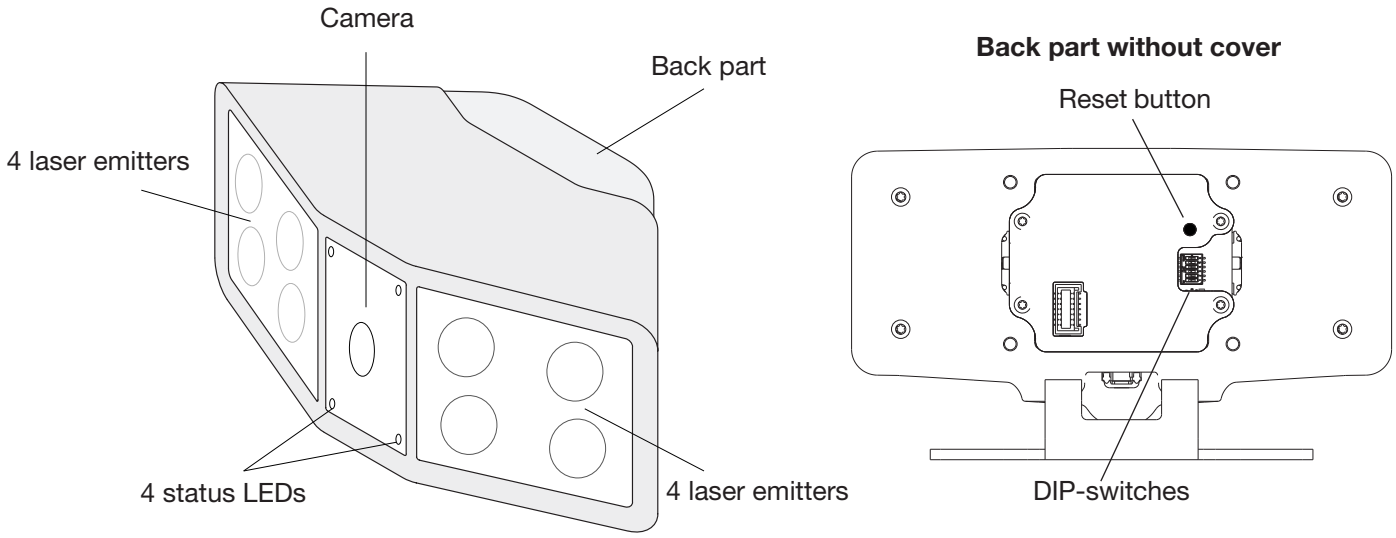

2.2. Safeguarding level E

The LEYON-Safe-E is a stand alone safety device when correctly installed and set up for the specific door and specific door controller. The safety compliance and certification is the responsibility of the door system installer. Using safety certified modules simplifies the certification procedure for the whole installation.

The LEYON-Safe-E sensor is certified according to EN 12453 safeguard E. Safeguard E is required when the door is used by the general public and controlled automatically. One Safeguard E sensor replaces two Safeguard C and D sensors.

To be certified safeguard E, the sensors must fulfill the requirements of EN 12978.

2.3. UL 325

The LEYON-Safe-E is certified in accordance to ANSI/CAN/UL 325, provided that the installation instructions from the standard are followed, and the relevant verification procedures are followed by the installer.

2.4. Identification number

Code	Option	Description
LEYON	-	Family name
Safe	-	Function
E	-	Safeguarding level

Additional characters may be used for customized versions.

2.5. Operation

The LEYON-Safe-E sensor has both input, output and communication options:

3 outputs, 2 inputs, and a Web app.

2.5.1 Outputs

The LEYON-Safe-E sensor has 3 relay outputs: 2 solid state and 1 electromechanical. The electromechanical output is based on a SPDT relay.

For optimal safety function, it is mandatory to connect one of the EMR outputs to the opening and closing function of the door controller as fits the door logic, and the **BROWN** and **BLUE** wires of the test input to the test output of the door controller. (See section 7 for wiring diagram).

The factory settings of the solid state outputs are warning output and error output. Via the Web app function of the solid state relays may be changed to be detection relays if this is the preferred method for the installation.

Make sure the unused wires do not cause short circuits!

2.5.1.1. Connection to a door controller

The sensor is a stand-alone device that must be connected to a door controller.

The door controller receives signals from the sensor and processes these signals to the proper actions. It also initiates regular safety checks of the sensor to ensure that the connection is free from error, and the sensor works as expected. More on the the test function in section 2.5.2.1.

2.5.2 Inputs

The LEYON-Safe-E sensor has 2 digital input channels: One for auto-Teach and one for test. For the sensor to function as a safety sensor, the test input must be connected to the door controller.

2.5.2.1. Test input, safety function verification

The test input is an integral part of the sensor's safety function. The purpose of testing is to verify proper sensor operation by sending a test pulse from the door controller to the sensor and receiving the expected return signals.

The test function is activated by connecting the **BROWN** and **BLUE** wires to the test outputs of the door controller. If the installation is covered by more than one sensor, all sensors must be connected to the same test output.

After the initial safety check of the installation, the door controller must perform regular, automatic safety tests using the test input before initiating any door movement.

This guide assumes a setup, where the door controller uses the Normally Closed SPDT output of the sensor (**GREY** and **GREEN** wires) for detection:

1. Ensure the sensor is installed according to the instructions in this manual, and correctly connected to the PLC/ door controller
2. Connect the test input (**BLUE** common and **BROWN** test wires) to the door controller's test output. The door controller initiates and controls tests
3. Confirm the sensor is in a state where nothing is detected in the Safety zone. At this point, the sensor output relay is energized
4. The door controller sends a test pulse to the sensor
5. The test signal runs a self diagnostic procedure of the sensor hardware
6. SPDT EMR output cycles to confirm the OK state to the door controller

This procedure ensures that the safety device is able to deactivate and re-activate, simulating the presence and absence of an object in the safety zone. Any malfunctions will be revealed by the test.

Notice: If the test input is not used, the installation as a whole will not conform to either Safeguarding E or UL325.

2.5.2.1.1. Test input and Eco function

Before initiating any door movement, the door controller must send a test pulse to the sensor to verify that the safety system is functioning correctly.

The sensor switches from idle state to run state when the test pulse is received. In run state, energy consumption increases due to higher light output and faster response time.

After 30 seconds, the sensor automatically returns to idle state. If the door controller sends a test pulse during run state, the timer restarts. The duration of the run state can be changed in the Settings tab of the web app, depending on the door speed.

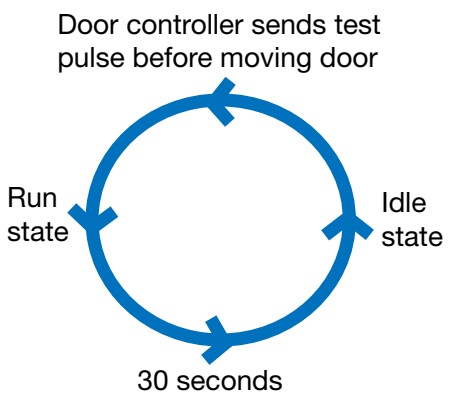

2.5.2.2. Teach input

The Teach input is used when auto-Teaching the sensor. During the auto-Teach, the sensor automatically learns the measurements of the door as well as any items to be ignored in the immediate vicinity of the door.

Please refer to chapter 6 for step-by-step instructions on the physical setup and auto-Teach procedure.

2.6. DIP switches and their function

The DIP-switches are located behind the back part of the sensor. Use an Allen key to gain access.

The switches are very small, please use a rounded tip and gentle motions to change settings.

- OFF setting is toward sensor edge:
- ON setting is toward sensor centre:

Factory settings have a blue background in the table below.

Please note that the DIP-switch settings are read during power-up. The sensor must be turned OFF and ON again after changing DIP-switch settings.

2.6.1. Function of DIP-switches

The DIP-switches have several functions depending on which DIP-switch is used. The top one is used to select a channel to prevent cross talk between neighboring sensors, the 4th and 5th are used to invert the output and disable Wi-Fi. Dip switches 2, 3 and 6 are currently not in use.

Please note the web app can be used to control the channel settings and the output inversion instead of the DIP switches

2.6.1.1. Cross talk and channels

Whenever two sensors are installed near each other, cross talk could potentially lead to unstable operation. Cross talk happens when light from one sensor enters the sensing area of another sensor, and their light has the same modulation. For optimum signal stability sensors should be set to different channels if they are installed near other sensors.

To accommodate installations where several doors are located in close proximity or facing, the LEYON-Safe-E sensor offers 2 modulation channels. These channels are selected using the first DIP-switch. Please refer to the figure below for channel settings.

IR light modulation frequency		
Channel	**1***	**2**
DIP 1		
Output inverter		
Output	**Not inverted***	**Inverted**
DIP 4		
Wi-Fi		
Wi-Fi	**Enabled***	**Disabled**
DIP 5		
Not in use		
DIP 2		
DIP 3		
DIP 6		

*Blue background = factory settings

2.6.1.2. Output inverter via DIP-switch

DIP 4: Invert relay output will cause both the Normal Open (N.O.) and Normal Closed (N.C.) contacts on the output relay to reverse function. When not inverted, the relay will be energized when no object is detected and will be de-energize when an object is detected. When inverted, the opposite will be true. This change affects all outputs equally.

Notice: If the outputs are inverted, the installation as a whole will not conform to either EN 12453 / EN 12978 or UL325.

2.6.1.3. Disable and enable Wi-Fi via DIP-switch

DIP 5: Enable/disable Wi-Fi. To ensure the Web app is inaccessible after installation, Wi-Fi may be disabled via this DIP-switch. In order to re-enable Wi-Fi, disconnect the power supply, move the DIP-switch back to the 'Enabled' position, and reconnect the power supply.

2.7. Factory reset

Press the reset button underneath the back cover for 10 seconds to reset sensor to factory settings. This reset does not affect the settings of the DIP-switches. It does reset the settings of the Web app as well as detection counter.

3. User interface/LEDs

The sensor has 4 multicolor LEDs, one in each corner of the central panel:

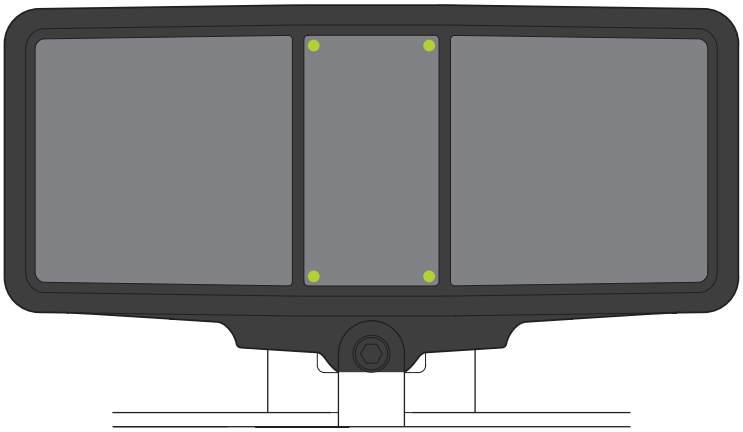

3.1. LED indications during run conditions

LED color	Pattern	Sensor state
4 x green	Blinking (~ 1 Hz) for 30 seconds	Start-up in progress after power up
4 x blue	Steady	Teach/set-up not yet performed
2 x green	Steady	Detection mode - Idle state - No detection
4 x green	Steady	Detection mode - Run state - No detection
4 x red	Steady	Detection mode - Run state - Detection in safety zone
4 x purple	Steady	Set-up mode
1 x blue	Steady - bottom right corner	Connected via Wi-Fi, combines with other indications
2 x orange	Blinking (~ 1 Hz) right side	Warning condition
4 x orange	Blinking (~ 1 Hz)	Error condition

3.2. LED indications during teach

LED color	Pattern	Sensor state
4 x blue	Blinking (~ 1 Hz)	Teach in progress
4 x blue	Blinking (~ 4 Hz)	Prompt to close door during auto-Teach
4 x green	One 5 second long blink	Auto-Teach completed successfully
4 x orange	One 5 second long blink	Auto-Teach completed but not successfully

4. Commissioning

4.1 Physical installation

Box contents: LEYON-Safe-E sensor with 10 m cable, spacer, mounting bracket with front screw, stickers with QR code for Wi-Fi connection and Web app access, quick start guide that includes drill template

Other materials: Ladder or lift, level, measuring tape, drill and drill bit appropriate for the door frame, screwdriver and 3x DIN7991 M5 screws or similar, Allen key to access DIP-switches

1. Choose the mounting position of the sensor on the top-left or top-right of the door, at a minimum height of 2.5 m to fulfill the requirements of EN 12453
2. Set up a safe method of accessing the mounting location
3. Ensure the view from the intended placement is unobstructed
4. Use drill template to drill holes for the installation.
5. Install spacer and bracket, making sure that the spacer is placed correctly. The spacer has left/right printed on it, showing the correct orientation for installation on the left/right side of the door
6. It is important to ensure correct installation distance between spacer and the door according to figure below
7. If DIP-switches need adjusting, do this now. See section 2.6.
8. Dock the sensor in the bracket and secure it with the front screw
9. Peel off protective plastic from front glass
10. Secure cable routing to door controller
11. Mount the QR-code stickers inside the control panel on the sensor cable or near the door controller to prevent unauthorized access

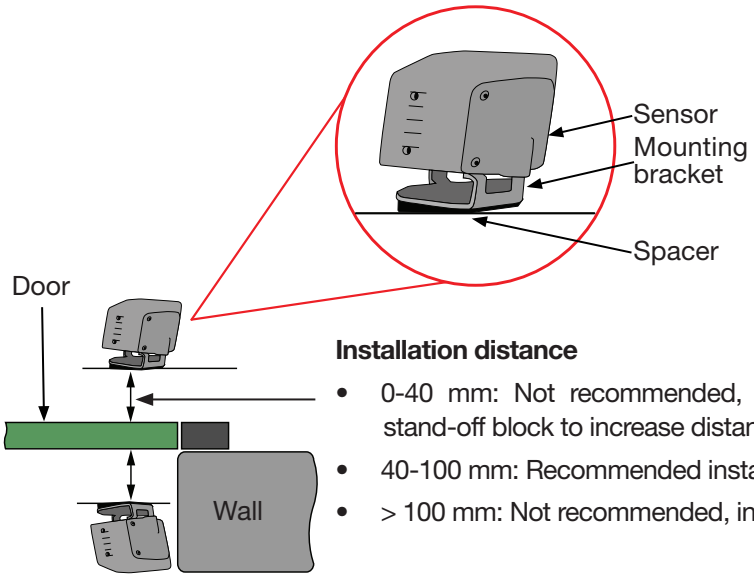

Mechanical installation video

Installation distance

- 0-40 mm: Not recommended, add universal bracket or stand-off block to increase distance
- 40-100 mm: Recommended installation distance
- > 100 mm: Not recommended, install sensor closer to door

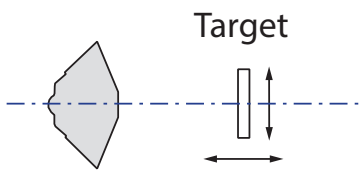

Test body: 70 x 30 x 20 cm (27.5 x 11.8 x 7.9 inches), 2% reflectivity. Minimum target size 5 cm (1.97 inches)

Warning: The installer must ensure that the “blind area” inside the door frame between sensors mounted on the front and rear of the door must be less than 20 cm, depending on the type of door and according to EN 12453 (annex D).

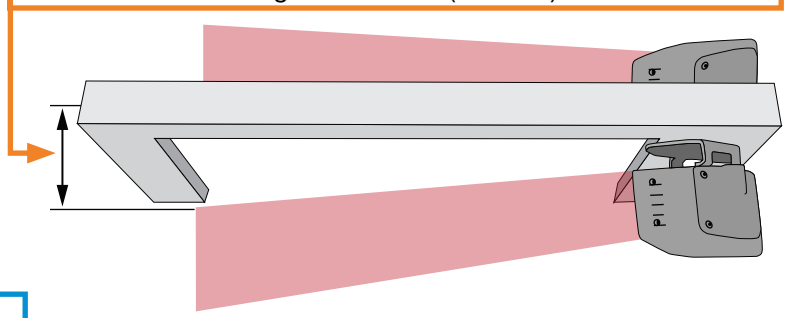

Notice: Avoid strong, direct sunlight. Sensor could overheat. Install sun protection.

4.2. Connecting the sensor

1. Power off installation
2. Connect sensor supply wires (**RED** and **BLACK** wires) to door controller. Make sure the door controller can supply 24 VDC and 20 W and fulfill requirements to power supply (see datasheet), or use a separate, sufficient power supply
3. Connect detection N.C. output wires (**GREY** and **GREEN** relay output) to input of door controller depending on controller logic
4. Connect test input wires (**BROWN** and **BLUE**) to door controller
5. Ensure unused wires do not cause short circuits, for instance by wrapping them individually
6. Power on installation. 4 GREEN LEDs will blink for 30 seconds during power up
7. 4 BLUE LEDs light up: The sensor is ready but no teach or set-up sequence has been performed yet

Connection video

4.3. Auto-Teach

Please note, that the Auto-Teach can also be initiated from the Web app

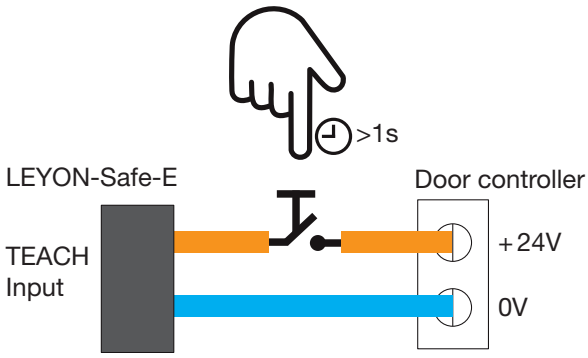

1. Remove all temporary and moving objects from area in front of door
2. Open the door, if it is not already open
3. To start auto-Teach, make sure the **BLUE** ground wire is connected, then connect the **ORANGE** wire to 24 VAC/DC for >1 second, then disconnect
4. 4 BLUE LEDs blinking slowly (~1 Hz) indicate auto-Teach procedure in progress. The sensor scans the doorway and its immediate vicinity
5. When all 4 BLUE LEDs blink quickly (~4 Hz), close the door. Confirm the door is closed by connecting 24 VAC/DC to **ORANGE** wire for >1 second, then disconnect
6. All 4 LEDs change to GREEN for 5 seconds and then go dark to confirm that the safety zone has been set up correctly and the auto-Teach procedure has been completed succesfully.
7. The sensor automatically exits auto-Teach: 4 GREEN LEDs light up
8. The sensor is ready to operate in detection mode. 4 GREEN LEDs confirm the safety zone is free of objects
9. Verify that the sensor changes state when something enters the safety zone, shown by 4 RED LEDs
10. Verify correct sensor function. If all works as expected, the installation is ready for safety inspection. If the installation needs further adjustments, please use Web app. Refer to chapter 5 for information on the Web app.

After the teach, the sensor will ignore items in the safety zone that were present and stationary during the teach process as long as they remain stationary and in the same position.

Auto-Teach video

Warning: Do not tamper.
Tampering will compromise operator safety and void warranty.

Warning: The installer is responsible for ensuring that the safety zone matches the door and that the installation complies with EN 12453 / EN 12978 / UL 325. Before commissioning, verify correct object detection and test the sensor, cabling, response times, and relay outputs.

5. Web app

This chapter has in-depth information on the options and uses of the Web app.

The LEYON-Safe-E sensor comes with 3 QR codes that help connect to the sensor Wi-Fi and Web app when scanned:

- 1 long that can be mounted on the cable inside the door controller box
- 1 square that can be mounted inside the door controller box
- 1 pre-mounted inside the sensor back part in case the other two are lost or damaged

Mount the QR codes in a location that requires tools for access in order to prevent unauthorized access.

The Wi-Fi connection of the LEYON-Safe-E sensor is a point-to-point connection between sensor and mobile device. This means that the mobile device has no internet connection while in contact with the sensor, making the connection safer as it cannot be exposed to external tampering.

5.1. Access to Web app with QR codes

The Web app can be accessed via a mobile phone, tablet, or pc with Wi-Fi capability, a camera and a browser. To connect to the sensor, make sure it is powered and running, then scan the QR code. The Wi-Fi information and the Web app adress are embedded in the QR code to make connecting easier.

In case the browser does not open by itself, open it manually and navigate to http://192.168.4.1. The password is unique to each sensor, and is found on the label inside the back part.

The Wi-Fi will automatically turn off after 30 minutes without any changes to the sensor settings, or when the connection to the Web app is terminated.

To turn the Wi-Fi back on, the sensor power must cycle OFF and ON again.

Link to web app

5.2. Web app menu

The placement of the Web app menu depends on the size of the browser, it can be vertical on the left or horizontal at the bottom. However, the icons and their use remains unchanged.

The icons are:

- Diagnostic - general information on sensor performance and status
- Detection - intiate Auto-teach, fine tune safety zone
- Parameters - settings for each output and general set up
- Settings - name and location of the sensor as well as firmware update

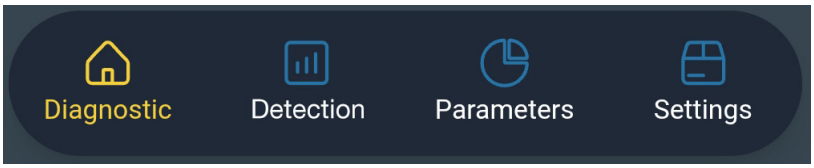

5.2.1. Set-up mode toggle

The set-up mode toggle is located at the top right hand corner of all tabs. When changing any settings 'Detection mode' automatically turns OFF, and the sensor enters 'Set-up mode'. In Set-up mode the sensor is not a safety device, and all outputs are disabled.

After saving the changes, switch the toggle back to 'Detection mode' and check the door function. When the user disconnects from the sensor Wi-Fi, the sensor automatically switches from 'Set-up mode' to 'Detection mode'.

Warning: Sensor is not at safety device while in 'Set-up mode'. Secure door against use.

5.3. Diagnostics

When the setup is done and the installation is safety verified, the diagnostics page is used to monitor the status of the LEYON-Safe-E sensor.

5.3.1 Sensor data

The first two boxes show information on the sensor:

- **Total operating hours**: How many hours has the sensor been operating since the very first power ON
- **Detection count**: How many times since the very first power ON the sensor has detected movement in the safety zone
- **Sensor name**: The name given to the sensor in the 'Settings' tab
- **Sensor location**: The placement of the sensor, given in the 'Settings' tab

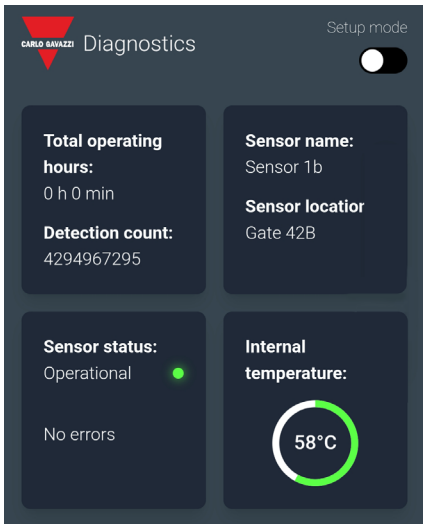

5.3.2. Sensor status

The sensor status shows 'Operational' and a green indication with the description 'No errors'.

5.3.3. Internal temperature

The box shows the current, internal temperature of the sensor. This is separate and different from the ambient temperature. The circle visualises the internal temperature of the sensor, which must stay within the recommended range to ensure proper function. The green circle will fill up as the internal temperature rises.

The warning and overheating will trigger a warning or an alarm depending on which threshold has been crossed. These will be shown by the LEDs on the sensor front. Warning and alarm outputs will also trigger, if these functions have been assigned. See section 5.5.2.

5.3.4. Event log

The event log shows what has happened with the sensor since the log last was cleared. The log saves an entry when an error or warning is triggered.

If needed, the sensor log may be cleared.

5.4. Detection

The Detection mode toggle is located at the top right hand corner. Detection mode means that the sensor is active as a safety device. When changing any settings 'Detection mode' automatically turns OFF, and the sensor enters 'Set-up mode'.

After saving the changes, switch the toggle back to 'Detection mode' and check the door function.

Warning: Sensor is not a safety device while in 'Set-up mode'. Secure door against use.

5.4.1. Safety zone

This tab shows how the safety zone is placed and its dimensions. None of the fields are entry fields, they are information only. In order to change any of the settings, either start an auto-Teach or a manual teach.

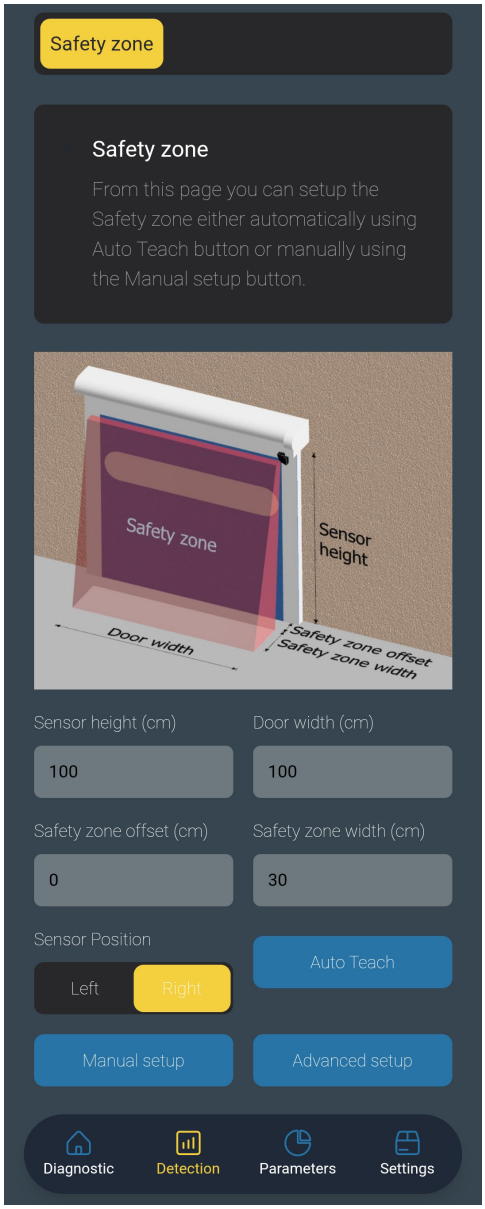

Sensor height (cm):

The sensor height is measured from the centre of the sensor front where the camera is placed to the floor.

Please note, that according to EN 12453 the minimum installation height is 250 cm.

Door width (cm):

The width of the door area that the sensor needs to keep track of, measured in cm

Safety zone width (cm):

How far into the room should the sensor react to movement? The minimum width is 10 cm, and the maximum width is 50 cm.

Safety zone offset (cm):

If the door is soft and could change shape, or if it could derail and protrude from the door frame, the offset to door is used to ensure there are no false positives.

The offset could also be negative if the door is set back into the frame. This ensures that movement within the doorframe is detected.

Sensor position:

Shows whether the sensor is placed on the left or right hand side of the door.

5.4.1.1. Manual set-up of the safety zone

To manually define the dimensions of the safety zone, follow the steps below.

Description	Image
Scan the QR code to access the sensor Wi-Fi and Web app.	
Go to the Detection tab.	
Press 'Manual setup' to start the procedure.	
Toggle sensor placement on the door frame and press 'Confirm'.	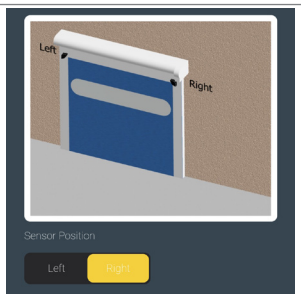
State whether the spacer is used or not. If it is not used, the installation angles can be defined manually. See 5.4.2. for more information Press 'Confirm'.	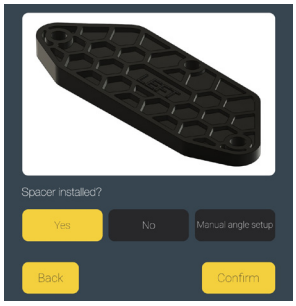
Enter sensor height and door width and press 'Confirm'.	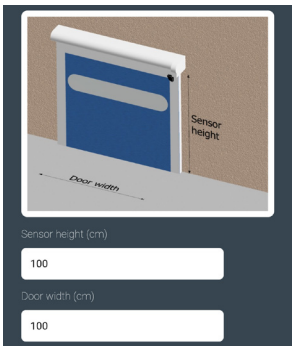
Define safety zone width at floor level and specify the offset from the door. The width must be between 10 cm and 50 cm. A width of approximately 25 cm is recommended. The offset can be anything from -50 cm .... +50 cm depending on door type and installation. Pres 'Confirm'. **NOTE**: If the safety zone width is less than 20 cm the installation does not comply with the safety requirements of EN 12453.	
After successful setup, the Web app displays a confirmation message. Press 'Confirm' to return to the Detection tab.	

Warning: The installer is responsible for ensuring that the safety zone matches the door and that the installation complies with EN 12453 / EN 12978 / UL 325. Before commissioning, verify correct object detection and test the sensor, cabling, response times, and relay outputs.

5.4.1.2. Auto-Teach safety zone via Web app

If preferred, Auto-Teach can be started from the Web app.

Warning: While in 'Set-up mode', the outputs are disabled. Secure door against use.

Description	Image
Scan the QR code to access the sensor Wi-Fi and Web app	
Go to the Detection tab	
Pres 'AutoTeach' to start the procedure	
Ensure the door is open and free from moving objects, then press 'Confirm'. The Auto-Teach runs in the background for approx. 10 seconds while the sensor learns the door dimensions, distance to the floor and floor characteristics. Objects mounted near the door are also recorded and ignored during this operation	
When 4 LEDs blink blue quickly, close the door and press 'Confirm'. The sensor now records the closed-door position and surrounding area. This process also takes approx. 10 seconds	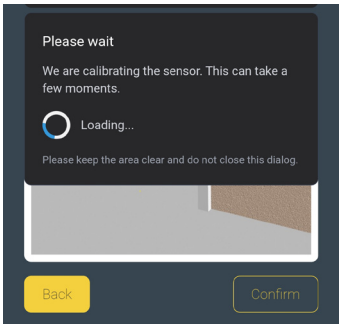
When the teach process is completed, a message indicates success or failure. Close the guide to return to the 'Detection' tab.	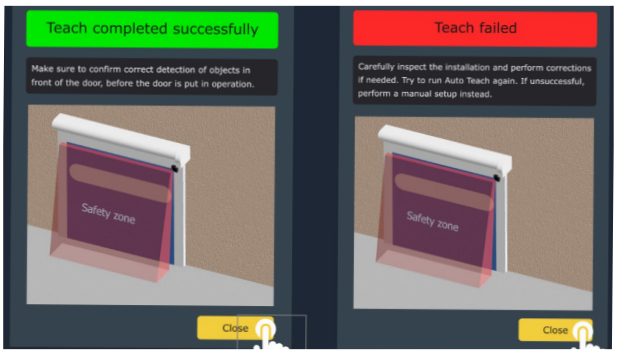

Warning: The installer is responsible for ensuring that the safety zone matches the door and that the installation complies with EN 12453 / EN 12978 / UL 325. Before commissioning, verify correct object detection and test the sensor, cabling, response times, and relay outputs.

5.4.2. Manually define installation angles

At times, the nature of the installation requires different mounting methods and angles than the standard provided by the spacer.

In order to set up sensor view angles to fit the installation, go to the the 'Detection' page and press the 'Advanced setup' button. If the angles do not describe the actual installation, the safety zone could be be placed incorrectly in relation to the door.

Warning: Sensor is not at safety device while in 'Set-up mode'. Secure door against use.

Description	Angles with spacer	Angles, no spacer	Visualization
Tilt angle: Incorrect entry means the sensor does not cover the entire door, but is skewed toward the floor or ceiling.	45°	45°	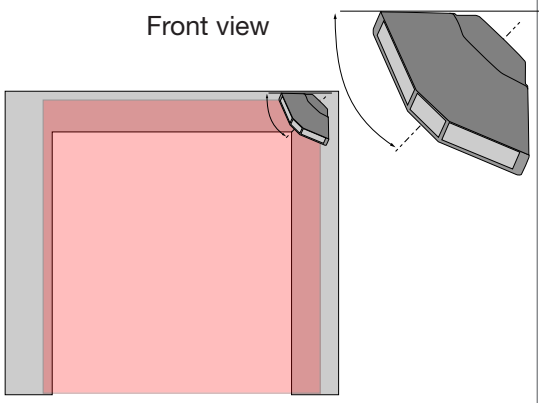
Roll angle: Incorrect entry could cause the safety zone to cover part of the interior of the door frame, and as a result the sensor may react to the movement of the door.	4°	0°	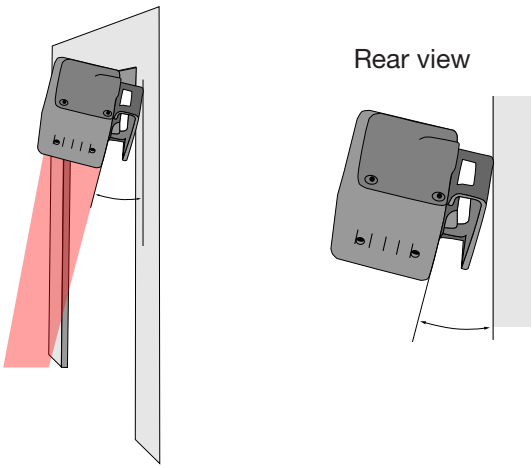
Pan angle: Incorrect entry could cause the safety zone to cover part of the interior of the door frame, and as a result it may react to the movement of the door.	2°	0°	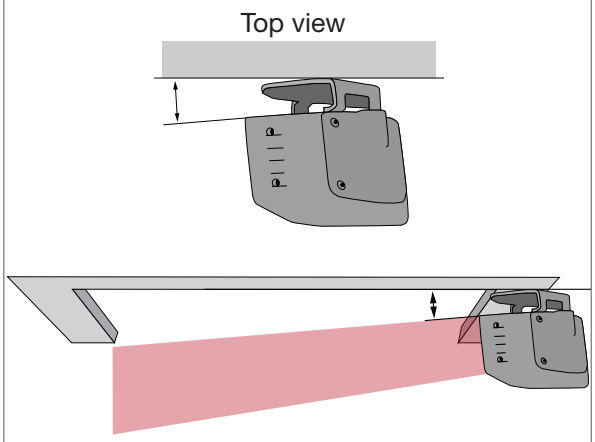

5.5. Parameters

The Detection mode toggle is located at the top right hand corner. Detection mode means that the sensor is active as a safety device. When changing any settings 'Detection mode' automatically turns OFF, and the sensor enters 'Set-up mode'.

After saving the changes, switch the toggle back to 'Detection mode' and check the door function.

Warning: Sensor is not at safety device while in 'Set-up mode'. Secure door against use.

The Sensor Parameters tab consists of 4 sections:

- General setup - basic functions of the sensor
- EMR output setup - settings for the electromechanical relay output (**grey**, white and **green** wires)
- SSR output 1 setup - settings for solid stat relay N.O. (**yellow** and **green** wires)
- SSR output 2 setup - settings for solid stat relay N.C. (**purple** and **green** wires)

5.5.1. General setup

General setup covers the following options:

LED function - the options are: Normal, detect, OFF

Channel selection - the options are 1 or 2

Floor offset - the options are: Off, 5 cm, 10 cm ... 25 cm

Parameter control - the options are: DIP-switch controlled, App controlled

Environment filter - the options are ON, OFF

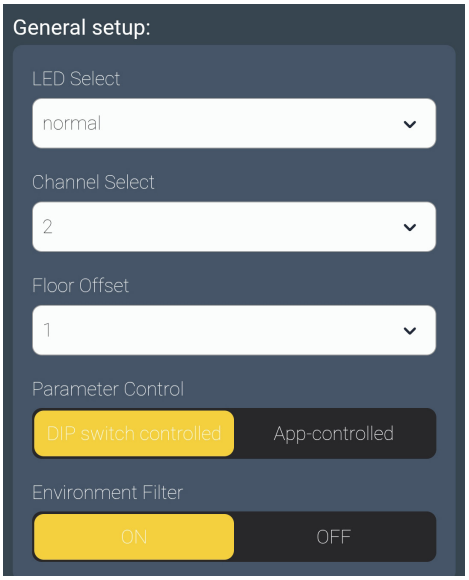

5.5.1.1. LED function

If so preferred, the indication LEDs may be disabled. They can be turned off, partially turned off so they only show detection, or fully enabled to show all status indications.

If 'Normal' is selected, all status indications, detection indications and web app connection is shown.

If 'Detect' is selected, only error and warning and detection indications are shown.

If 'OFF' is selected, only error and warning indications are shown. These indications will always be shown as they are central to the safety function of the sensor. This setting is primarily to make the sensor less noticable, for example to lessen the risk of tampering.

Remember to save any changes and check the door function after switching the toggle back to 'Detection mode'.

5.5.1.2. Channel select

Whenever two sensors are installed near each other, cross talk could potentially lead to unstable operation. Cross talk happens when light from one sensor enters the sensing area of another sensor, and their light has the same modulation. For optimum signal stability sensors should be set to different channels (light modulations) if they are installed near other sensors.

To accommodate installations where several doors are located in close proximity or facing, the LEYON-Safe-E sensor offers 2 modulation channels. These channels are selected from the dropdown menu, or selected via DIP switches.

Remember to save any changes and check the door function after switching the toggle back to 'Detection mode'.

5.5.1.3. Floor offset

The floor offset defines how far above the floor, the safe zone should start. The options are:

- Minimum
- 5 cm
- 10 cm
- 15 cm*
- 20 cm*
- 25 cm*

> ! *** Notice**: Floor offsets of 15, 20 cm or 25 cm are permitted only for installations outside the scope of EN 12453 / EN 12978 or UL 325.

The offset from the floor setting is primarily used outdoors to accomodate for snow, leaves or similar debris on the ground. Still, the safety zone must start no higher than 10 cm above floor level to remain compliant .

Remember to save any changes and re-run one of the Teach-sequences in order for the changes to the floor offset to take effect. Remember to check the door function.

5.5.1.4. Parameter control

This setting toggles between controlling the parameters by the Web app or by the DIP-switches.

The default setting is controlled via DIP-switches.

If the parameters are controlled via DIP-switches, then the Web app will display what the DIP-switch settings indicate. DIP-switches can control sensor channels, output inverter as well as disable the sensor Wi-Fi and thereby also disable the Web app.

Toggle this switch to control the channel and inverter settings via the Web app.

Remember to save any changes and check the door function after switching the toggle back to 'Detection mode'.

5.5.1.5. Environment filter

The environment filter removes small, temporary objects from the safety zone. This helps filter out snow and similar environental influences.

Remember to save any changes and check the door function after switching the toggle back to 'Detection mode'.

> ! **Notice**: A door installation with an activated enviroment filter will not react fast enough to comply with EN 12453 / EN 12978 or UL 325.

5.5.2. Output setup:

The EMR settings apply to both EMR outputs equally, while the SSR outputs can be set up individually. Any modified settings are highlighted with a yellow background that remains until the changes are saved.

5.5.2.1. Output functions

The output functions are:

- Safety
- Warning
- Error
- Off

5.5.2.1.1 Safety function

This is the default setting of the EMR output.

The safety function should be selected according to the requirements of the door controller. One output is N.O. the other is N.C.

The safety function keeps the door controller from closing the door if a presence is detected in the safety zone.

Remember to save any changes and check the door function after switching the toggle back to 'Detection mode'.

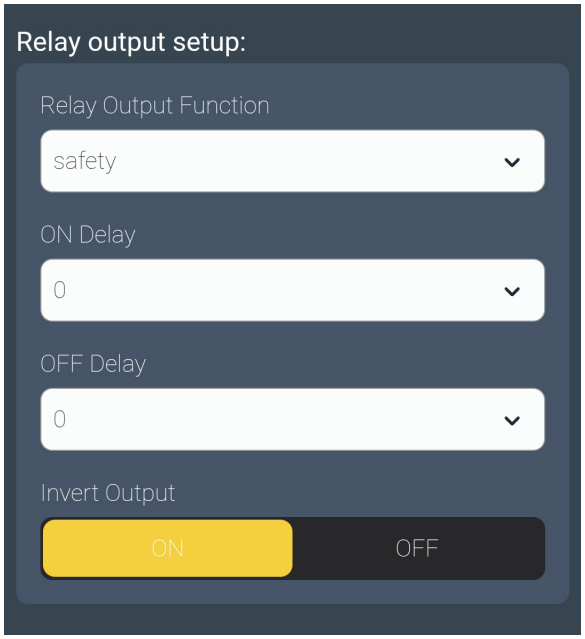

5.5.2.1.2. Warning output

This is the default setting of the N.O. SSR output. The warning output gets triggered when the internal temperature of the sensor nears dangerous levels.

The Diagnostics tab of the Web app shows the cause of the warning.

5.5.2.1.3. Error output

This is the default setting of the N.C. SSR output. The error output gets triggered when the conditions reach a level where the sensor cannot function as a safety device: If the sensor has impaired signal strength for instance from the sensor front being blocked by ice or snow, if the temperature raches dangerous levels, or if other influences severly impact its function. This could be voltage error or if something is wrong with the camera, the illumination board or the internal MCU.

If the cause of the error is not obvious, connect to the Web app.

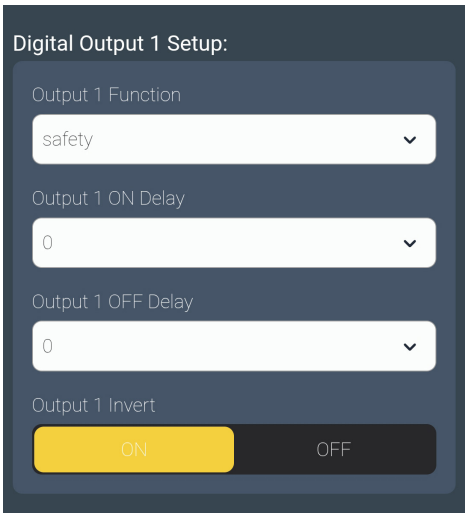

5.5.2.2. ON delay

ON-delay is used to filter warning or error output to ensure the signal is sent only if the situation is ongoing. The ON-delay is chosen via a dropdown with the following options:

- 0 ms
- 100 ms
- 250 ms
- 500 ms
- 1000 ms
- 2000 ms
- 5000 ms

Notice: A door installation with an ON-delay on the detection output will not react fast enough to comply with EN 12453 / EN 12978 or UL 325.

Remember to save any changes and check the door function after switching the toggle back to 'Detection mode'.

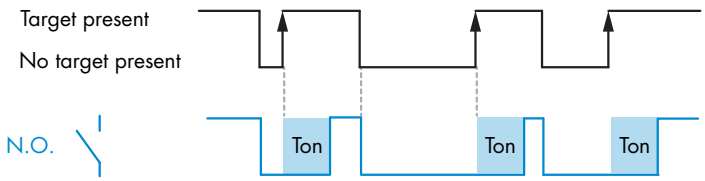

Example with normally open output

DANGER: DO NOT set an ON-delay on the safety output. This could result in serious injury or death.

5.5.2.3. OFF delay

If the door controller needs more time to react to the sensor output, the OFF delay may be the solution.

The OFF is chosen via a dropdown with the following options:

- 0 ms
- 100 ms
- 250 ms
- 500 ms
- 1000 ms
- 2000 ms
- 5000 ms

The deactivation of the relay is delayed by the specified amount of time after the object has moved out of the light beam as shown in the figure below. This means that the relay only deactivates if the light beam remains free from objects longer than the off delay.

Remember to save any changes and check the door function after switching the toggle back to 'Detection mode'.

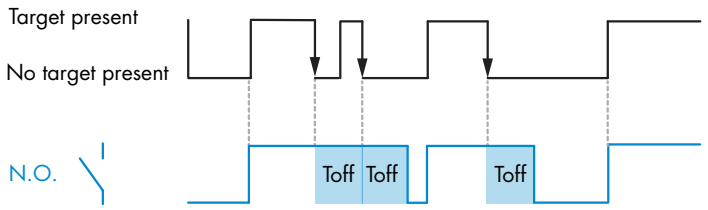

Example with normally open output

5.5.2.4. Output inverter

Each output can be inverted from the following defaults:

- EMR output: 1 N.O. and 1 N.C. output
- SSR output 1: N.O. output
- SSR output 2: N.C. output

The toggle switches N.O. to N.C. and vice versa. This is useful if the door controller needs a certain output type, that is already in use. Then the output inverter can be used to tailor the outputs to the needs.

Remember to save any changes and check the door function after switching the toggle back to 'Detection mode'.

Notice: If the outputs are inverted, the installation as a whole will not conform to either EN 12453 / EN 12978 or UL325.

5.6. Settings

5.6.1. Access to the 'Settings'

The Detection mode toggle is located at the top right hand corner. Detection mode means that the sensor is active as a safety device. When changing any settings 'Detection mode' automatically turns OFF, and the sensor enters 'Set-up mode'.

After saving the changes, switch the toggle back to 'Detection mode' and check the door function.

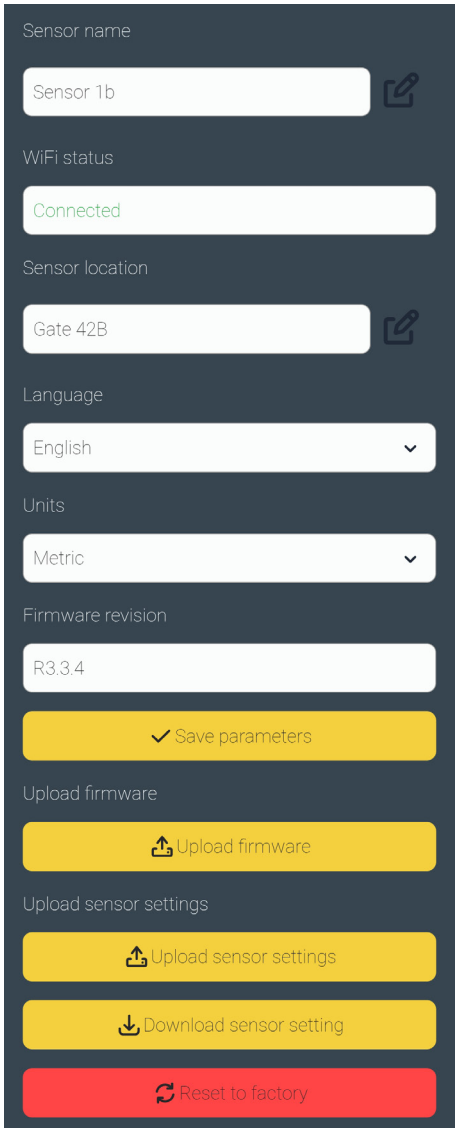

> **Warning:** Sensor is not at safety device while in 'Set-up mode'. Secure door against use.

5.6.2. Settings

The 'Settings' tab contains functions that are less frequently used.

5.6.2.1. Sensor name and location

If several sensors are mounted close by each other, naming the sensor and its position is best practice. Naming the sensors makes it easier to make sure the correct sensor is being accessed.

Remember to save any changes and toggle back to 'Detection mode' after changing settings and testing door function.

5.6.2.2 Web app language

English is the default language setting of the Web app. If this is not the preferred language, the following interface languages may be selected from the dropdown: English, Spanish, Italian, German, French, Danish or Chinese.

Remember to save any changes and toggle back to 'Detection mode' after changing settings and testing door function.

5.6.2.3. Units

The units used in the interface can be re-defined to reflect the units used in the area: Either metric or imperial. After saving, the selected units will be used in all interfaces.

5.6.2.4. Eco function

Adjust the run state duration in the dropdown menu. The run state timer starts when the door controller sends a test signal to the sensor. Make sure that the door can complete opening or closing within the set duration.
The options are:

- 10 seconds
- 20 seconds
- 30 seconds (default)
- 60 seconds
- Off

In case the Eco function is disabled (Off), the sensor will constantly operate at full speed, and may consequently heat up if running in a warm environment.

5.6.2.5. Upload firmware

Firmware update is a manual process that must be uploaded to one sensor at a time. Firmware updates are downloaded from the Carlo Gavazzi website.

1. Download the file to the mobile device, and save it in a folder, that is easy to find again.
2. Connect to sensor Wi-Fi
3. Connect to sensor Web app
4. Go to the settings tab and press the 'Upload firmware' button
5. Browse to the file location on the mobile device and select it to start the upload
6. After upload, remember to cycle power OFF and ON again

Notice: No firmware updates will be pushed to sensors by Carlo Gavazzi.

Firmware updates should only be handled by people with insight into the repercussions of doing so.

5.6.2.6. Upload and download settings

In order to duplicate settings from one sensor to another, a settings file may be downloaded from the sensor to the phone/pc/tablet and uploaded from there to another sensor of identical make and model.

1. Connect to sensor Wi-Fi and Web app of sensor 1
2. Go to the settings tab, and press 'Download sensor settings'. Save the file in a folder on the mobile device that is easy to find again
3. Disconnect from sensor 1
4. Connect to Wi-Fi and Web app of sensor 2
5. Go to the settings tab and press the 'Upload sensor settings' button
6. Browse to the file location on the mobile device and select it to start the upload

After upload, remember to cycle power OFF and ON again

5.6.2.7. Reset to factory

If the sensor is behaving strangely despite all the settings seemingly being correct, try resetting it to factory settings.

This will reset the information in the Detection tab, the Parameters tab and the Settings tab. This includes the safety zone size and placement as well as the 'Detection Count', but excludes 'Total operating hours' as found in the Diagnostics tab.

All DIP switch settings will also remain untouched by the reset.

Reset to factory may also be done by pressing and holding the push button next to the DIP switches under the back cover of the sensor.

6. Trouble shooting

This section describes troubleshooting for the LEYON-Safe-E sensor.

EN

6.1. Sensor LEDs do not light up

When sensor has sufficient power and current, 4 LEDs will light up.

Resolution suggestions:

- Is the installation powered?
- Is the **black** wire connected to GND?
- Is the **red** wire connected to the supply?
- Ensure the power supply is sufficient: The sensor requires 24 V DC and 20 Watt
- Are the LEDs disabled? Check in the Web app > Parameters > LED (see section 5.5.1.)

6.2. Door does not stop and re-open when it should

If something enters the safety zone while the door is closing, but the door does not re-open, check the following:

Resolution suggestions:

- Is the power supply sufficient and supplying the sensor? Check if the LEDs light up correctly
- Check that the output wiring fits the door logic.
- Are any unused wires separated? Short circuits will hamper proper door function
- Is the sensor view of the safety zone uninterrupted?
- Is the sensor mounted solidly in the original position? If the sensor position has shifted, the safety zone has also moved. Remount sensor solidly in original position
- Does the safety zone cover the entire door? Check installation angles: The recommended installation angle is parallel to side and top of door frame using the supplied spacer (see also section 5.4.2 on installation angles)
- Check the sensor front for dirt and dust, and clean with a soft cloth if required. Orange LEDs indicate low signal strength as will the Web app > Diagnostics page (see section 5.3.)

6.3. Door stops and re-opens despite empty safety zone

If the door cannot close and re-opens without anything in the safety zone check the following:

Resolution suggestions

- Is the door soft? Could it change shape due to wind? Install sensor on a long arm or bracket that that leaves more space for the door. Alternatively change the pan angle to make the sensor look further out from the door frame
- Could the door derail from the tracks? Clear the physical installation and move the safety zone out from the door frame as described above
- Re-teach Safety zone leaving more space for the door
- Are there interruptions or moving items in the safety zone? Bushes near the door could enter the safety zone in high winds. Re-teach Safety zone or set up an exclusion zone using the Web app
- Are people needing to work near the safety zone and an un-intended elbow entered the safety zone? Either re-teach, set up an exclusion zone or move the work station
- Is the sensor solidly mounted in the original position? If the sensor position has shifted, the safety zone has also moved. Re-mount sensor solidly in original position
- Is the OFF delay active and very long? Disable or shorten OFF delay time
- Are there other sensors nearby? Make sure there is no cross talk between the sensors (see sections 2.6.1. and 5.5.1.2.)

6.4. Sensor test signal does not work

If nothing happens when the door controller sends a test signal to the sensor, please check the following

Resolution suggestions

- Are the test input wires (**brown** and **blue**) connected to the test output of the door controller?
- Is the power supply connected to the sensor?

6.5. Sensor Wi-Fi not found

The sensor has a built in Wi-Fi for access to the Web app. Use a mobile device to connect to it.

Resolution suggestions

- Does the sensor have power? Check that the front LEDs are lit
- Is the sensor Wi-Fi activated? Power cycling the installation will turn sensor Wi-Fi on again unless it is disabled
- Is the sensor Wi-Fi disabled via the DIP-switches? See section 2.6.1.3.
- Do the scanned QR codes belong to the sensor? Each sensor has a unique QR code printed on stickers in the box. The QR code contains Wi-Fi and Web app access information.

6.6. Auto-Teach unsuccessful

If the 4 LEDs give a single, 5 seconds long, orange blink at the end of the teach process, the auto-Teach was unsuccessful.

Resolution suggestions

- Did the sensor have power throughout the teach process? If not, start the auto-Teach procedure again
- Was there movement in the safety zone during the teach process? Clear the safety zone of items and people, and start the auto-Teach procedure again
- Check the door frame near the sensor: Are there any large, protruding objects close to the sensor, that block the view of the door frame? Either do a manual teach via the Web app or mount the sensor on the other side of the door frame.
- Are highly reflective objects mounted just beneath the sensor? Either adjust the placement and angle of the sensor to point more toward the door, do a manual teach, or change sensor position to the other side of the door.

6.7. Sensor gets confused by nearby sensor

If two sensors are mounted close together, the light from one sensor could be reflected to the other sensor and cause irregular operation.

Resolution suggestion1 - using the Web app

- Connect to Wi-Fi either by scanning the QR code or by searching for the Wi-Fi
- Connect to Web app either by scanning the QR code or by entering the Web app address into the browser
- Go to 'Parameters' and set up each sensor to different channels.
- Save settings

Resolution suggestion 2 - using DIP switches

If Wi-Fi access to the sensor is disabled, the channels may also be selected via the DIP-switches underneath the back cover:

- Power off installation
- Unmount the sensor
- Unscrew back panel
- Select a channel via the DIP-switches, see section 2.6.1.1.
- Remount back panel
- Remount sensor
- Repower installation

7. Wiring diagram

10 wire cable color code

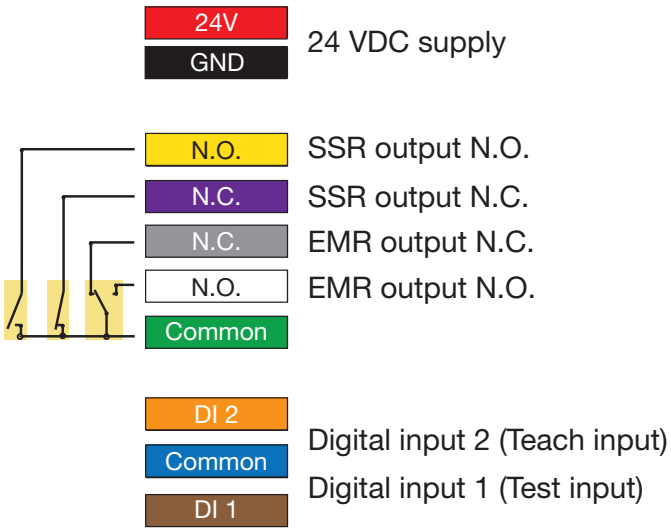

Wire selection diagram

Cable color	Cable function	Function	Wiring diagram
Red	24 V	24 VDC supply	
Black	GND		
Yellow	N.O.	SSR output N.O. Factory setting: Warning output	
Green	Common		
Violet	N.C.	SSR output N.C. Factory setting: Error output	
Green	Common		
Grey	N.C.	SPDT EMR output N.C.	
Green	Common		
White	N.O.	SPDT EMR output N.O.	
Green	Common		
Orange	DI 2	Teach input	
Blue	Common		
Brown	DI 1	Test input	
Blue	Common		

8. Dimensions in mm (inches)

LEYON-Safe-E

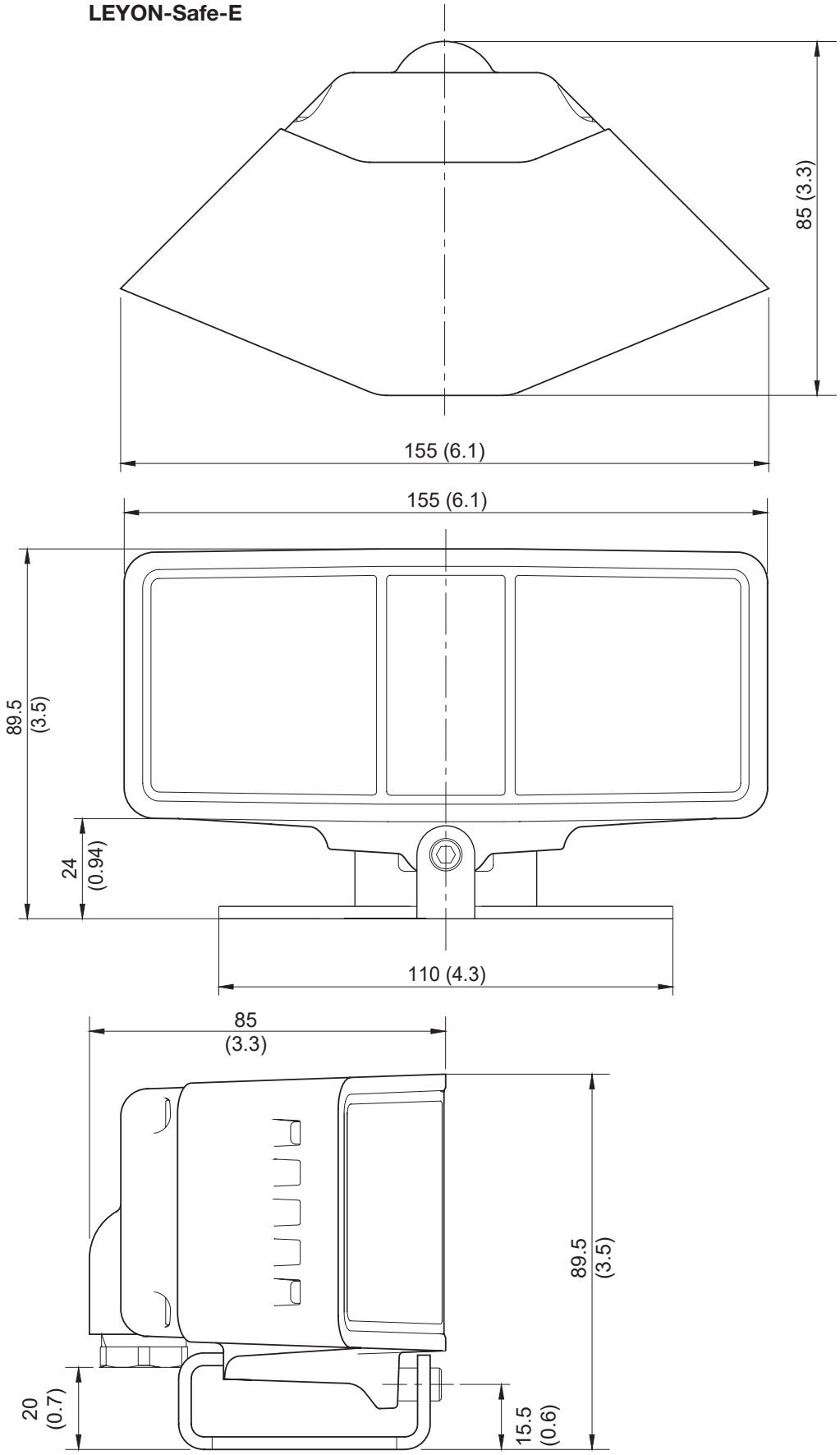

9. Installation Hints

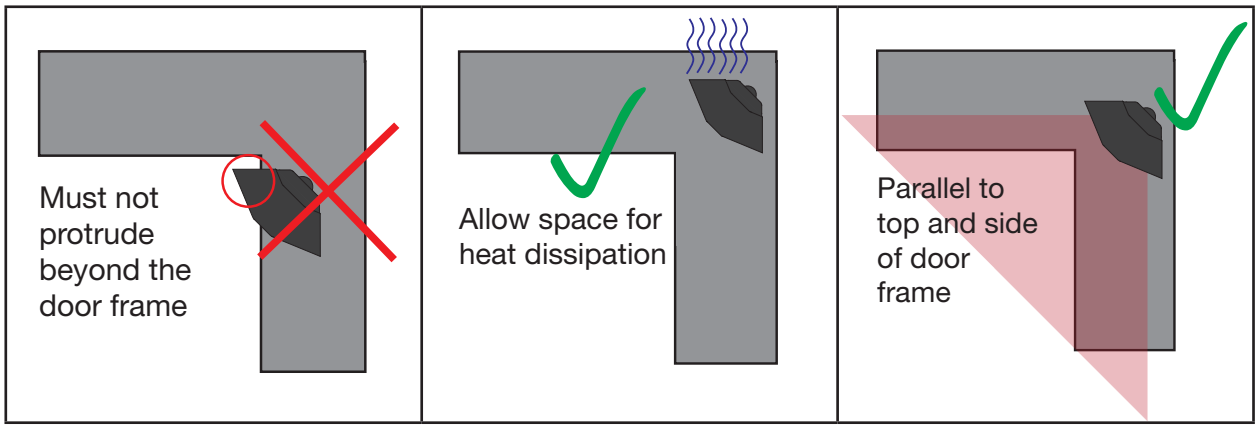

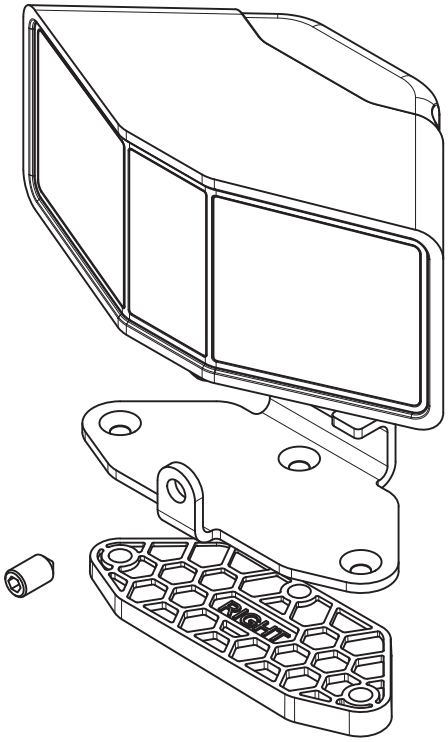

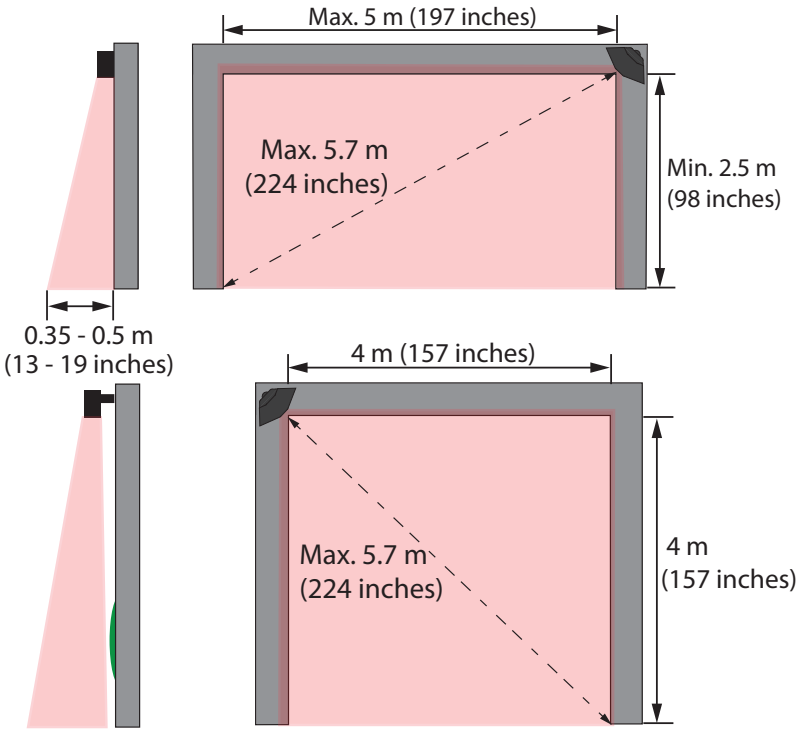

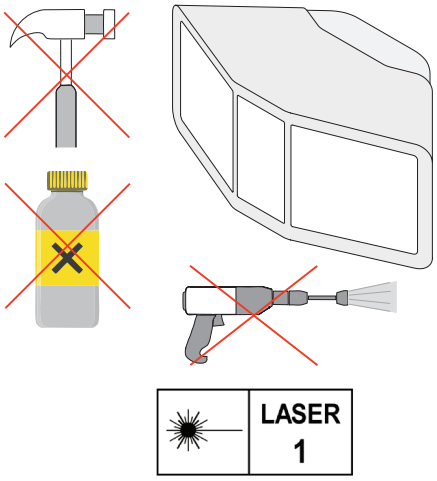

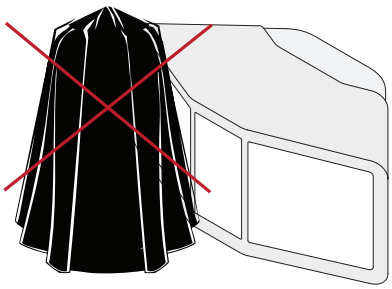

Prevent direct impacts
No harsh chemical cleaners
No high pressure washing
Do not cover front glass

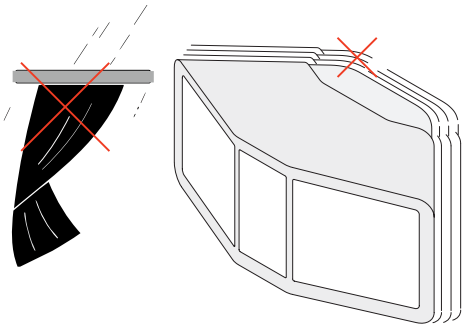

Avoid moving objects in safety zone
Avoid strong vibrations

10. Other documents

Datasheet		http://cga.pub/?7edfea
Carlo Gavazzi home page		www.gavazziautomation.com
Accessories		http://cga.pub/?424711
Declaration of conformity		http://cga.pub/?d918c9

MAN LEYON-Safe-E ENG rev.01 - 10.2026